DATE	DESCRIPTION	REV.
4.18.12	CHANGE AS PER ECN 12-049	A
4.23.12	CHANGE AS PER ECN 12-054 ADD (B1) (B2) DIMENSIONS	B
8.02.13	CHANGE AS PER ECN 13-064	C
4.28.14	CHANGE AS PER ECN 14-046	D

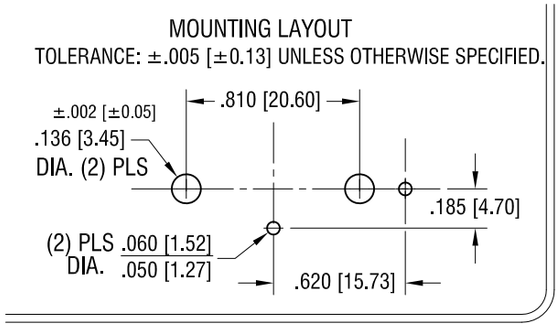

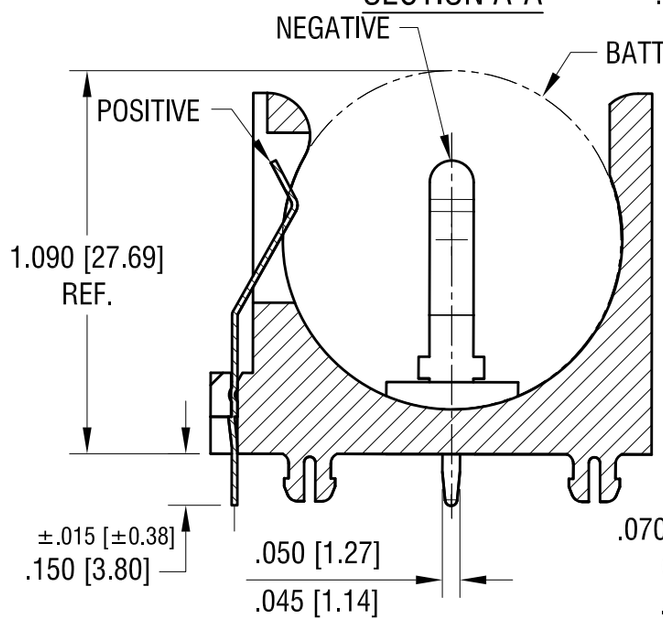

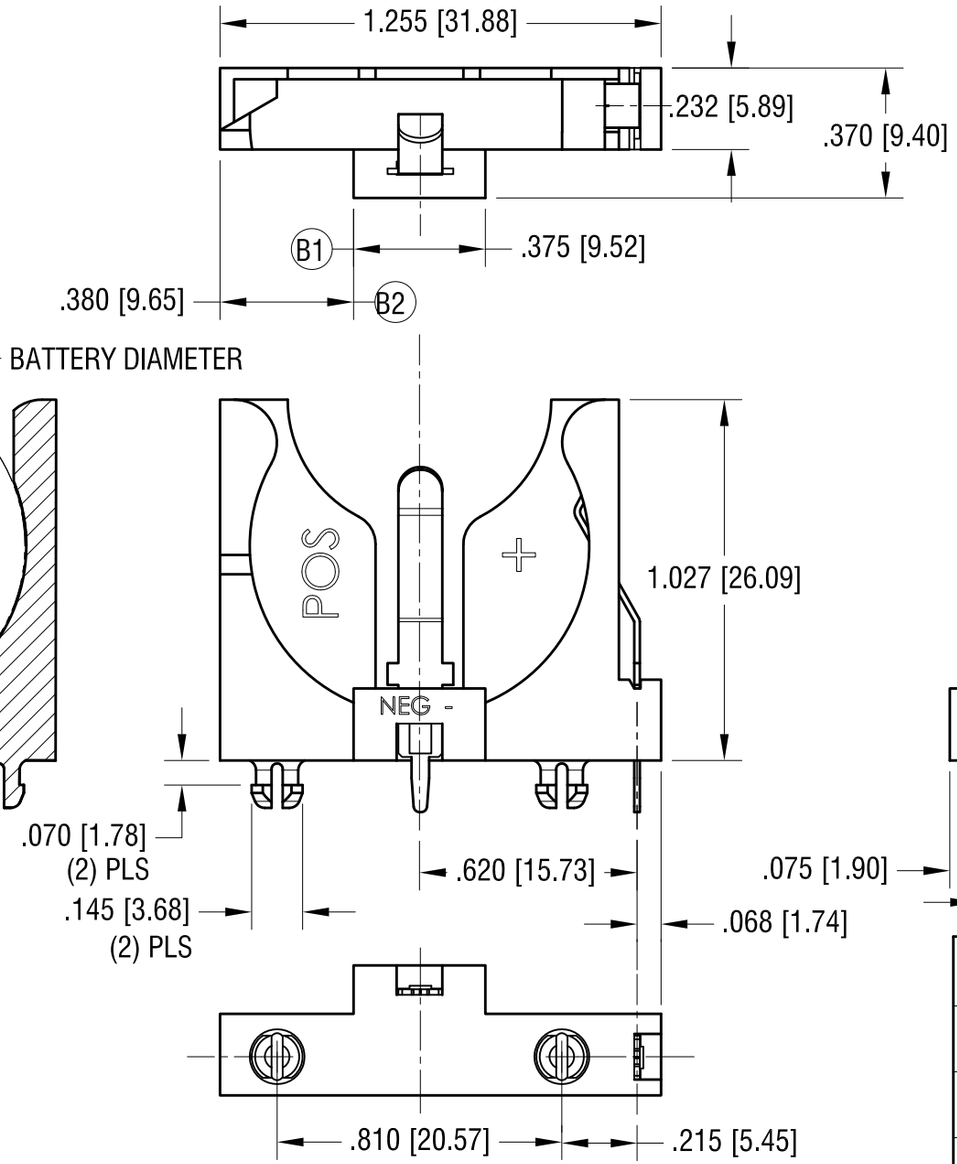

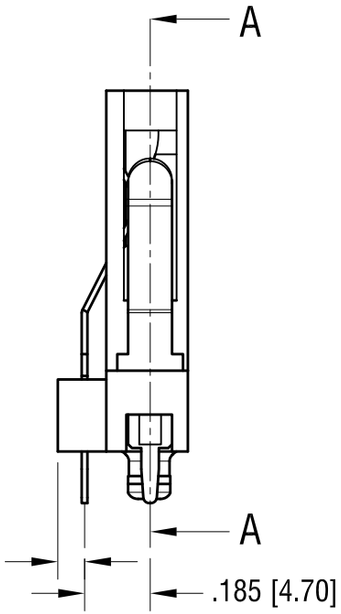

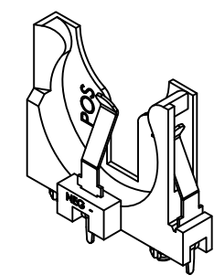

ACTUAL SIZE

NOTES:

1. BASE:
   MAT'L - PBT (UL 94V-0) BLACK
   CONTACTS:
   MAT'L - .016 [0.40] TH'K STAINLESS STEEL
   FINISH - TIN NICKEL PLATE.

THIS DOCUMENT IS THE PROPERTY OF KEYSTONE ELECTRONICS CORP. AND SHALL NOT BE REPRODUCED, DISTRIBUTED OR USED AS A BASIS FOR MANUFACTURE WITHOUT PRIOR WRITTEN PERMISSION FROM KEYSTONE ELECTRONICS CORP.

KEYSTONE ELECTRONICS CORP.
www.keyelco.com • ASTORIA, N.Y. 11105-2017 • Tel (718) 956-8900

PART NAME: VERTICAL 24mm COIN CELL HOLDER

MATERIAL: AS NOTED

FINISH: AS NOTED

DRN BY: NT | DATE: 12.03.11

APP'D: LN | SCALE: 2X

TOLERANCES INCH [MM]
DECIMAL ± .010 [± 0.25]
ANGULAR ± 1°
UNLESS OTHERWISE SPECIFIED

CODE: C

DWG NO. 1068